International Journal of Current Engineering and Technology
E-ISSN 2277 – 4106, P-ISSN 2347 - 5161
©2014 INPRESSCO®, All Rights Reserved
Available at http://inpressco.com/category/ijcet

Research Article

PI-Like Fuzzy Logic Direct Torque Control of Permanent Magnet Synchronous Motor

Alaa A. AL-Saffar [Ȧ*], Abbas H. Abbas[Ḃ] and Dhiaa K. Shary [Ȧ]

[Ȧ]Electrical Engineering Department-Technical College of Basrah-Foundation of Technical Education, Basrah-Iraq
[Ḃ]Electrical Engineering Department- College of Engineering -University of Basrah, Basrah-Iraq

Accepted 20 January 2014, Available online 01 February 2014, **Vol.4, No.1 (February 2014)**

Abstract

In this paper, the modeling of the Direct Torque Control (DTC) system of permanent magnet synchronous motor (PMSM) based on Matlab/Simulink environment is presented. Simulation results are introduced to predict the motor drive system performance and the effect of PI-like fuzzy controller parameters on speed response in this system . The simulation results show that the torque ripple can be reduced by narrowing the torque hysteresis loops width.

Keywords: *Permanent synchronous motor (PMSM), direct torque control (DTC), PI-like fuzzy controller.*

1. Introduction

Direct Torque Control (DTC) is a popular control technique widely applied in motor drive applications since it was proposed by Depenbrock and Takahashi (M. Depenbrock *et al*;T. I *et al*). By directly controlling the flux and torque, both techniques yield fast dynamic response and high performance (Z. Lu, H. Sheng *et al*). The basic principle of DTC is to directly select stator voltage vectors according to the differences between the references and actual torque and stator flux linkage (L. Zhong *et al*).

The DTC has many favorable features, such as no need of complicated coordinate transformation and pulse width modulation (PWM). Also, it is insensitive to motor parameters, which is inevitable in the vector control scheme. A major problem associated with the popular DTC is the big torque and flux ripples because of the use of two simple two-value hysteresis controllers for the stator flux linkage and the torque. In addition, the use of a 60^0 angular region based signal for choosing the space voltage vector applied to the stator windings, which is so crude that none of these space voltage vectors generated by the voltage source inverter (VSI) could offer a precise control of the torque and the stator flux linkage at the same time. These ripples can be reduced if the errors of the torque and the flux linkage, and the angular position signal of the flux linkage are subdivided into several smaller subsections. By choosing a more accurate space voltage vector , more accurate control of torque and flux linkage can be obtained (D. Sun *et al*). In this paper, the DTC of PMSM is proposed and the choice of null-vectors and vector sequence are properly selected to improve the performance of motor drive system.

*Corresponding author: **Dhiaa K. Shary**

2. The Mathematic Model of PMSM

The model of the PMSM is derived by using d and q variables in a rotor reference frame, the voltage equations are:

$$V_d = R_s i_d + d\Phi_d/dt - w\Phi_q \quad (1)$$

$$V_q = R_s i_q + d\Phi_q/dt + w\Phi_d + w\Phi_f \quad (2)$$

It is noted that the stator flux linkage components are:

$$\Phi_d = L_d i_d + \Phi_f \quad (3)$$

$$\Phi_q = L_q i_q \quad (4)$$

Where R_s is the stator winding resistance, L_d and L_q are d-q axis inductances, Φ_f is the rotor flux linkage generated by the permanent magnets, V_d and V_q are the d-q axis voltages, Φ_d and Φ_q are d-q axis fluxes, i_d and i_q are d-q axis currents and w is the angular speed of the rotor (S. Kar *et al*; G. Almandoz *et al*).

The mechanical torque equation referred to motor-load system is given by:

$$T_e = (J/p)\, dw/dt + (D/P)\, w + T_L \quad (5)$$

with

$$T_e = \frac{3}{2} p\left(\Phi_d i_d + \left(L_d - L_q\right) i_d i_q\right) \quad (6)$$

where D is the damping torque coefficient, J is the moment of inertia of rotor, T_L is the load torque and P is the number of pole pairs (A. Gebregergis *et al*; J. Singh *et al*).

3. Direct Torque Control Strategy

A. Control of stator flux linkages

When the motor is fed from a three-phase inverter, the stator voltage is determined by the status of the power switches. Therefore, there are six non-zero voltage vectors,V_1(100), V_2(110) ,…, and V_6(101), and two zero

voltage vectors, V_7(000) and V_8(111).Two zero voltage vectors are at the origin and the six non-zero vectors are 60^0 apart from each other in voltage vector plane as shown in Fig.(1). Both the amplitude and rotating speed of the stator flux linkage can be controlled by selecting the proper stator voltage vectors (J. Liu *et al*).

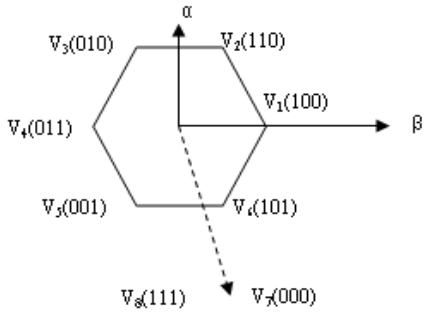

Fig. (1) Sectors of stator flux linkage.

B. Control of the amplitude of stator flux linkage

The stator flux linkage Φ_s in stationary reference frame is:

$$\Phi_s = \int (V_s - R_s i_s)dt \quad (7)$$

where V_s and i_s are the stator voltage and the stator current, respectively. To select the voltage vectors for controlling the amplitude of the stator flux linkage, the voltage vector plane is divided into six regions. In each region, two adjacent voltage vectors, which give minimum switching frequency, are selected to increase or decrease the amplitude of stator flux (J. Sinivas Rao *et al*).

C-Control of the rotation of stator flux linkage

In case of PMSM , Φ_s is changed even when zero voltage vectors are applied since the magnets rotate with the rotor. Therefore, zero voltage vectors are not used for controlling Φ_s in PMSM. The electromagnetic torque can be controlled by controlling the amplitude and rotational speed of Φ_s.

For counter clockwise operation, if the actual torque is smaller than the reference then the voltage vectors that keep Φ_s rotating in the same direction are selected. If the actual torque is greater than the reference, the voltage vectors that keep Φ_s in the reverse direction are selected instead of zero voltage vectors. By selecting the voltage vectors in this way , Φ_s is rotated all the time and its rotational direction is determined by the output of the hysteresis controller for torque. The switching table for controlling both the amplitude and rotating direction of Φ_s is as follows.

In Table I,E_Φ and E_T are the outputs of the hysteresis controllers for flux linkage and torque, respectively. If E_Φ=1 then the actual flux linkage is smaller than the reference value. The same is true for the torque. N(1,2,,….6) represents the sector numbers for stator flux linkage (] M. F. Rahmam *et al*).

4. DTC Implementation of PMSM

A. Flux linkage estimator

As shown in the block diagram of DTC of PMSM in Fig.(2), the inverter switching states are determined according to the error of torque (E_T) and the error of flux (E_Φ) (W. Jun *et al*).

Table I

E_T	E_Φ	N					
		1	2	3	4	5	6
1	1 0	V_2 V_6	V_3 V_1	V_4 V_2	V_5 V_3	V_6 V_4	V_1 V_5
0	1 0	V_3 V_5	V_4 V_6	V_5 V_1	V_6 V_2	V_1 V_3	V_2 V_4

$$E_T = T_{eref-} T_e \quad (8)$$

$$E_\Phi = \Phi_{eref-} \Phi_s \quad (9)$$

The stator flux linkage can be determined as follows:

$$\Phi_s = \sqrt{{\Phi_\alpha}^2 + {\Phi_\beta}^2} \quad (10)$$

$$\Phi_\alpha = \int (U_\alpha - R_s i_\alpha)dt \quad (11)$$

$$\Phi_\beta = \int (U_\beta - R_s i_\beta)dt \quad (12)$$

where Φ_α and Φ_β are α-β axis fluxes, i_α and i_β are α-β axis currents.

The α-β axis voltages (U_α and U_β) are calculated from the dc-link voltage V_{dc} and switching signal S_a, S_b and S_c as follows:

$$U_\alpha = \sqrt{\frac{2}{3}}\, V_{dc}\, (S_a - \frac{1}{2}(\, S_b + S_c\,) \quad (13)$$

$$U_\beta = \sqrt{\frac{1}{2}}\, V_{dc}\, (\, S_b - S_c\,) \quad (14)$$

Also

$$i_\alpha = \sqrt{\frac{3}{2}}\, I_a \quad (15)$$

$$i_\beta = \sqrt{\frac{1}{2}}\, (I_b - I_c\,) \quad (16)$$

B -Torque estimator

The torque can be calculated from the α-β axis voltages and currents as (R. R. Menon *et al*):

$$T_e = \frac{3}{2} p(\Phi_\alpha i_\beta - \Phi_\beta i_\alpha) \quad (17)$$

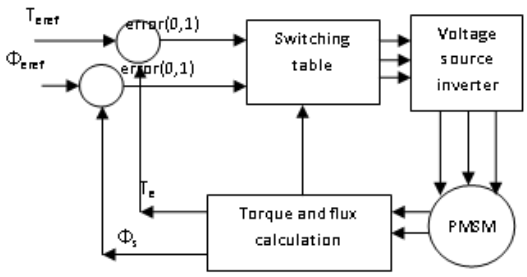

Fig. (2) Block diagram of DTC.

5. Fuzzy Logic Control (FLC)

The speed closed loop with PI-Fuzzy controller structure is shown in Fig.(3). The inputs of this FLC are normalized values of the speed error denoted (e) and its integrated

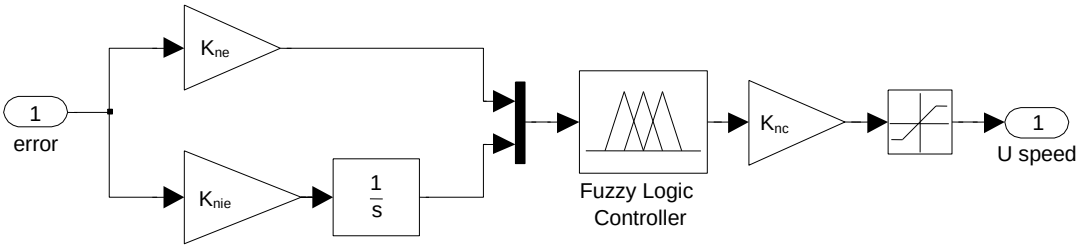

Fig. (3) Simulation model of PI-Like Fuzzy Controller.

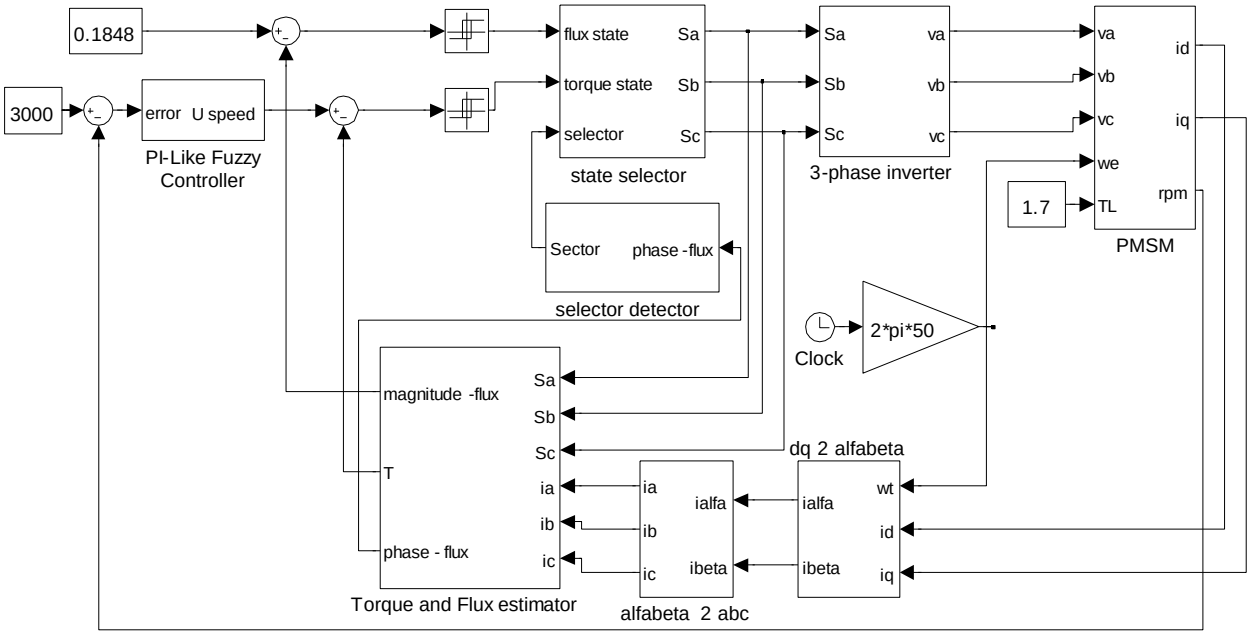

Fig. (4) DTC simulation model of PMSM

value denoted (ie). Two scaling factors (K_{ne} and K_{nie}) are used to normalize the actual speed error and its integrated value. The output of controller is the normalized change of the motor speed command which generates the actual value of the motor speed when its multiplied by a third scaling factor (K_{nc}).

From the speed behavior analysis , Table II has been developed to obtain a good performance in the speed closed loop into which the following fuzzy sets used in the membership functions: NB is negative big, NM is negative medium, NS is negative small, Z is equal zero, PB is positive big, PM is positive medium , and PS is positive small (K. Chikh *et al*).

Table 2

Ie / e	NB	NS	Z	PS	PB
NB	NB	NB	NB	NS	Z
NS	NB	NB	NS	Z	PS
Z	NB	NS	Z	PS	PB
PS	NS	Z	PS	PB	PB
PB	Z	PS	PB	PB	PB

6. Simulation results

The simulink model of the proposed DTC of PMSM is shown in Fig.(4) under the PI-like fuzzy speed controller. The parameters of PMSM and control parameters are shown in Table III and IV, respectively (see appendix).
The simulink model implemented in this paper is shown in Fig.(4) which consists of seven blocks as follows:-

A. abc-dq Conversion Block

To convert 3-phase voltages to voltages in the 2-phase synchronously rotating frame, they are first converted to 2-phase stationary frame (α,β) and then from the stationary frame to the synchronously (dq) rotating frame. The transformation is given by the following equations:

$$\begin{bmatrix} V_\alpha \\ V_\beta \end{bmatrix} = \sqrt{\frac{2}{3}} \begin{bmatrix} 1 & \frac{-1}{2} & \frac{-1}{2} \\ 0 & \frac{\sqrt{3}}{2} & \frac{-\sqrt{3}}{2} \end{bmatrix} \begin{bmatrix} V_a \\ V_b \\ V_c \end{bmatrix} \quad (18)$$

$$\begin{bmatrix} V_d \\ V_q \end{bmatrix} = \begin{bmatrix} \cos\theta & \sin\theta \\ -\sin\theta & \cos\theta \end{bmatrix} \begin{bmatrix} V_\alpha \\ V_\beta \end{bmatrix} \quad (19)$$

B. Motor dq-Model Block

The dq-model of PMSM is represented according to Eqns. (1-4).

C. dq-abc Conversion

This conversion does the opposite of the abc-dq conversion for the current variables.

D. Torque and Flux Estimator Block

This block is used to estimate the stator flux which is given in Eq.(7). This block is also used to obtain the developed electromagnetic torque produced by simulated machine using Eq.(17).

E. Sector Detector Block

This block is used to detect the sector of the stator flux.

F. State Selector Block

After the sector of stator flux, error of stator flux and error of torque are obtained. These values are fed to direct torque control block which contains the lookup table which is used to obtain the desired voltage state vector according to the desired sectors mentioned in Table I.

J. Three Phase Inverter Block

This block contains two-level three-phase voltage source inverter which are controlled by the proper signal generated by the state selector block.

Fig.(5) shows the simulated dynamic performance of the torque control loop of DTC system ,which is obtained by applying a step torque command from full load (1.7 N.m.) to 1 N.m at 3000 rpm. The simulated result shows that the torque ripples under DTC scheme are much smaller than those of the open loop. Also, this result confirms that the proposed DTC of PMSM is an effective method for accurate control of the electromagnetic torque.

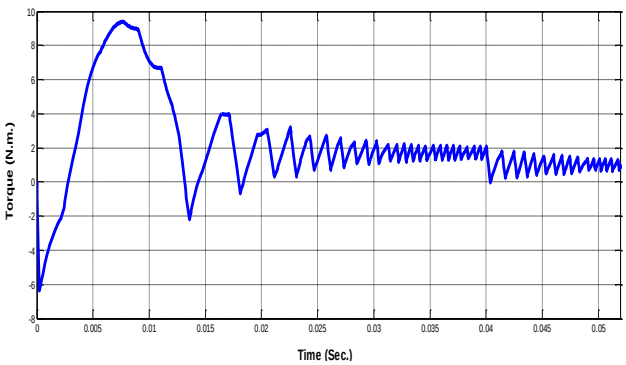

Fig. (5) Torque response with load change from full load (1.7 N.m.) to (1 N.m.).

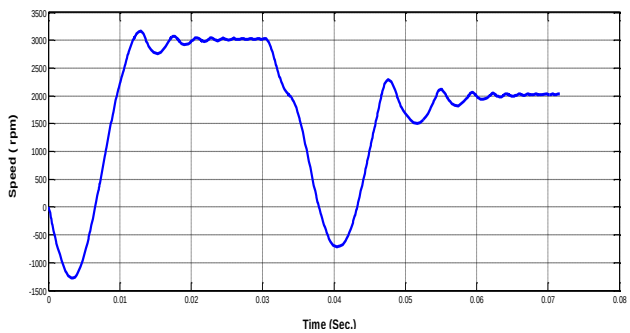

Fig. (6) Speed response with a step speed command of 3000-2000 rpm.

Fig.(6) shows that the estimated speed could accurately track the change of the real speed when speed reference has changed and have fast response. The proposed DTC system is relatively robust with respect to the change of speed reference where a step speed command of 3000-2000 rpm is applied at 1.7 N.m. load torque . The parameters of speed loop PI controller in this system are carefully tuned such that the optimal performance is achieved.

Conclusion

In this paper, Direct Torque Control with permanent magnet synchronous motor are proposed and simulated in Matlab/ Simulink. This technique is used for generating a desired value of pluses by using an appropriate value of switching frequencies. The analysis carried out in this paper is aimed to propose DTC scheme in order to improve the performance of PMSM drive in terms of simple Fuzzy speed controller structure, fast response and torque and current low ripple. The simulation results provide the feasibility and validity of the proposed control system.

Appendix A

Table 3

Motor constants		Values
Stator resistance	R_s	4.765 Ω
Torque	T_L	1.7 Nm
d-axis inductance	L_d	0.014 H
q-axis inductance	L_q	0.014 H
PM flux	Φ_f	0.1848 Wb
Rated speed	w	3000 rpm
Rated current	i_s	6.89 A
Number of poles	p	2
Moment of inertia	J	0.0001051
Friction factor	D	$4.047e^{-5}$
Stator flux reference	Φ_s	0.1848 Wb
Frequency	f	50 Hz

Table 4

Controller constants	Values
K_{ne}	0.28
K_{nie}	0.0089
K_{nc}	50

Nomenclature

f supply frequency
i_d,V_d stator d-axis current and voltage
i_q,V_q stator q-axis current and voltage
J inertia of motor
P pole number
R_S stator phase resistance
T_e electrical torque
T_L load torque
Φ_s stator flux
Φ_f permanent magnet flux

References

M. Depenbrock (Oct 1988), Direct Self-Control of Inverter-Fed Machine, *IEEE Trans. Power Electron*., pp. 420-429.

T. I, and N. T (Nov 1986) A New Quick-Response and High-Efficiency Control Strategy of an Induction Motor, *IEEE Trans. on Industry Applications* , pp. 821-827.

Z. Lu, H. Sheng, H. L. Hess, and K. M. Buck (2005), The Modeling and Simulation of a Permanent Magnet Synchronous Motor with Direct Torque Control Based on Matlab/Simulink, *IEEE* , pp. 1150-1156.

L. Zhong, M. F. Rahman, W. Y. Hu, and K. W. Lim (May 1997), Analysis of Direct Torque Control in Permanent Magnet Synchronous Motor Drives, *IEEE Transaction on Power Electronics*, vol. 12, no. 3, pp. 528-536.

D. Sun, Y. He, and J. Guo Zho (June 2004), Fuzzy Logic Direct Torque Control for Permanent Magnet Synchronous Motors, *Proceedings of the 5th World Congress on Intelligent Control and Automatic,*15-19, Hangzhou, P.R.China.

S. Kar, and S. Kumar Mishra (2012), Direct Torque Control of Permanent Magnet Synchronous Motor Drive with a sensorless Initial Rotor Position Estimation Scheme,*IEEE.*

G. Almandoz, J. Poza, M. Angel Rodriguez, and A. Gonzalez (2008),Modeling of Cross-Magnetization Effect in Interior Permanent Magnet Machines, *Proceedings of the International Conference on Electrical Machines*.

A. Gebregergis, M. Islam, T. Sebastian, and R. Ramakrihnan (2011),Evaluation of Inductance in a Permanent Magnet Synchronous Motor, *IEEE International Electric Machines & Drive Conference (IEMDC)*

J. Singh, B. Singh, and S. P. Singh (2011), Performance Evaluation of Direct Torque Control with Permanent Magnet Synchronous Motor,S-JPSET:ISSN:2229-7111, vol. 2, pp. 25-35.

J. Liu, P. Sheng Wu, H. Yu Bai, and X. Huang (2004), Application of Fuzzy Control in Direct Torque Control of Permanent Magnet Synchronous Motor, *Proceedings of the 5th World Congress on Intelligent Control and Automatic*, June 15-19, Hangzhou, P.R.China.

J. Sinivas Rao, S. Chandra Sekhar, and T. Raghu (2012), Speed Control of PMSM by Using DSVM-DTC Technique, *International Journal of Engineering Trends and Technology* ,vol. 3.

M. F. Rahmam, L. Zhong, W. Y. Hu, and K. W. Lim (1997), A Direct Torque Controller for Permanent Magnet Synchronous Motor Drives,*IEEE* , TD1-(2.1-2.3).

W. Jun, P. Hong, and J. Yu (June 2004), A Simple Direct – Torque Fuzzy Control of Permanent Magnet Synchronous Motor Drive, *Proceedings of the 5th World Congress on Intelligent Control and Automatic*, 15-19, Hangzhou, P.R.China.

R. R. Menon, S. Jebarani Evangeline, and A. Gopinath (Dec 2012), Modified Direct Torque Control of permanent Magnet Synchronous Motor by Using Voltage Vectors of Variable Amplitude and Angle, *International Journal of Engineering and Advanced Technology (IJEAT)*, vol. 2, pp. 285-289,

K. Chikh, M. Khfallah, and A. Saad (2012), Improved DTC Algorithms for Reducing Torque and Flux Ripples of PMSM Based on Fuzzy Logic and PWM Techniques, Matlab- A Fundamental Tool for Scientific Computing and Engineering Applications-Volume 1, Chapter 8.